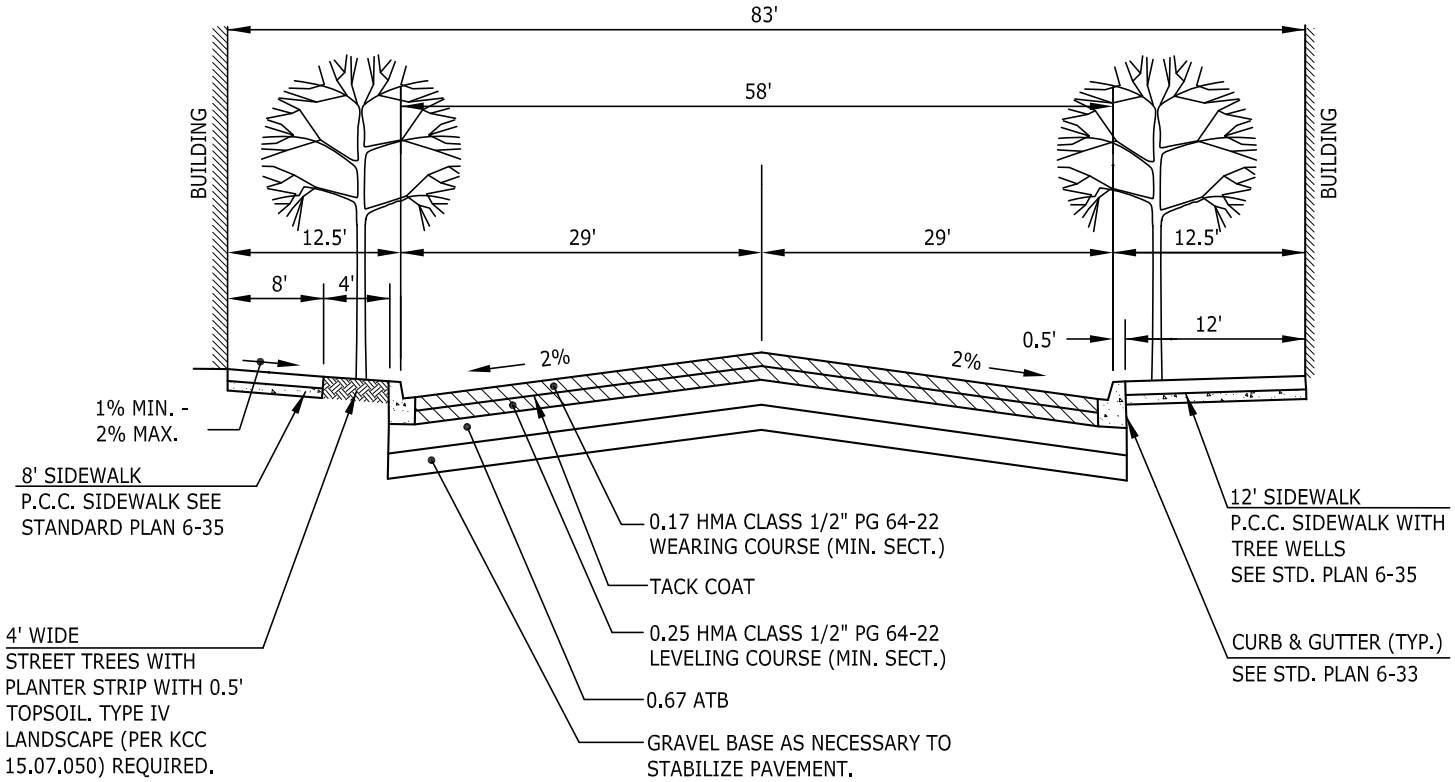

NOTES:

1. THIS DETAIL SHALL BE USED FOR CENTRAL AVE; WILLIS ST, WEST OF CENTRAL AVE; SMITH ST. AND JAMES ST., SR-167 TO CENTRAL AVE; MEEKER ST WEST OF 4TH AVE; AND 4TH AVE NORTH OF WILLIS.
2. THE PAVEMENT WIDTH IS MADE UP OF 2 11'-WIDE TRAVEL LANES, 2 12'-WIDE CURB LANES, AND 1 12'-WIDE TURN LANE.
3. THE 1' GUTTER IS INCLUDED IN THE CURB LANE; AND THE 0.5' CURB IS NOT INCLUDED IN THE SIDEWALK OR PLANTER STRIP WIDTH.
4. AN 8' CLEAR WIDTH FOR PEDESTRIAN TRAVEL IS REQUIRED ON THE SIDEWALK.
5. THE 12' SIDEWALK WIDTH CAN BE REVISED TO A 4' PLANTER STRIP AND 8' SIDEWALK.
6. ADD 14' TO STANDARD CROSS SECTION WHEN DUAL LEFT TURN LANES ARE REQUIRED AT AN INTERSECTION. STORAGE LENGTH TO BE DETERMINED BY A TRAFFIC STUDY.
7. ADDITIONAL WIDTH WILL BE REQUIRED FOR NONMOTORIZED FACILITIES IF THE STREET IS ON A DESIGNATED BICYCLE ROUTE. SEE THE TRANSPORTATION MASTER PLAN AND STANDARD PLAN 6-31.
8. A LANDSCAPED MEDIAN SHOULD BE USED WHERE THE ENGINEER DETERMINES A TWO-WAY LEFT-TURN LANE IS NOT REQUIRED.
9. WHEN A ZERO FOOT SETBACK IS NOT UTILIZED, A 1' LEVEL AREA BEHIND THE SIDEWALK WITH A 1% MIN AND 2% MAX. SHALL BE PROVIDED. WHEN THE SLOPE BEHIND THE 1' LEVEL AREA EXCEEDS 3:1, 0.33' OF COMPACTED CRUSHED SURFACING TOP COURSE SHALL BE PROVIDED IN THE 1' AREA.
10. DESIGN SIDEWALK CROSS GRADE SHALL BE 1.5%.

NOTE: THIS PLAN IS NOT A LEGAL ENGINEERING DOCUMENT BUT AN ELECTRONIC DUPLICATE. THE ORIGINAL, SIGNED BY THE ENGINEER AND APPROVED FOR PUBLICATION IS KEPT ON FILE AT THE CITY OF KENT. A COPY MAY BE OBTAINED UPON REQUEST.

KENT WASHINGTON

CITY OF KENT
ENGINEERING DEPARTMENT

DOWNTOWN OVERLAY
MINOR ARTERIAL STREET

DESIGNED DWH
DRAWN BB
CHECKED
APPROVED

SCALE NONE
DATE
ENGINEER

STANDARD PLAN
6-8