September 2009

TYPE	MEMBER																		ALL POSTS
	TOP RAIL						LINE & BRACE POST						END, CORNER & PULL POST				GATE POST		
	ROUND		HI-COLUMN		ROLL FORMED		ROUND		HI-COLUMN		ROLL FORMED		ROUND		ROLL FORMED		ROUND		
	1.0 PIPE (INCHES)	WEIGHT PER FOOT (POUNDS)	SIZE (INCHES)	WEIGHT PER FOOT (POUNDS)	SIZE (INCHES)	WEIGHT PER FOOT (POUNDS)	1.0 PIPE (INCHES)	WEIGHT PER FOOT (POUNDS)	SIZE (INCHES)	WEIGHT PER FOOT (POUNDS)	SIZE (INCHES)	WEIGHT PER FOOT (POUNDS)	1.0 PIPE (INCHES)	WEIGHT PER FOOT (POUNDS)	SIZE (INCHES)	WEIGHT PER FOOT (POUNDS)	SIZE (INCHES)	WEIGHT PER FOOT (POUNDS)	LENGTH
1	1 1/4	2.27	1 1/4 X 1 5/8	1.35	1 5/8 X 1 1/4	1.35	2	3.65	2 1/4	4.0	1 5/8 X 1 7/8	2.34	2 1/2	5.79	3 1/2 X 3 1/2	5.14	3 1/2	9.1	8'-8"

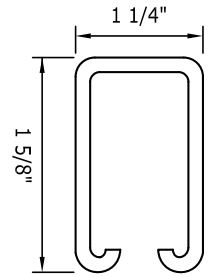

RAIL AND BRACE

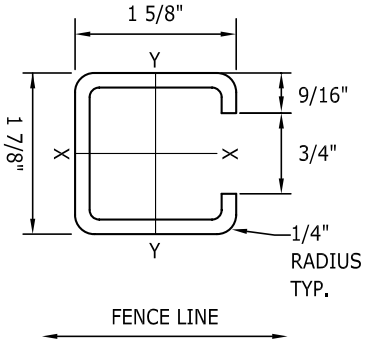

LINE POST

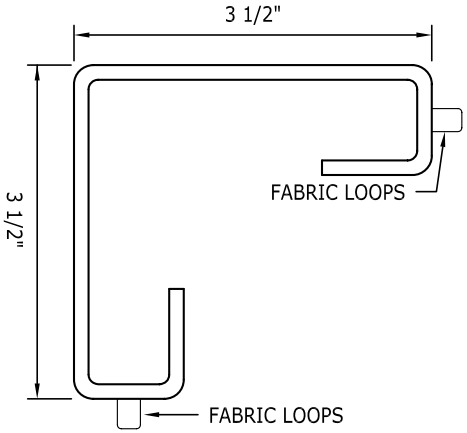

END, CORNER AND PULL POST

NOTES:

1. ALL MATERIAL AND INSTALLATION SHALL BE PER SECTION 8-12 AND 9-16 OF THE WSDOT STANDARD SPECIFICATIONS
2. ALL CONCRETE POST BASES SHALL BE 12" MINIMUM DIAMETER.
3. ALL POSTS SHALL BE SPACED AT 10' MAXIMUM INTERVALS AND SET IN CONCRETE UNLESS OTHERWISE DIRECTED BY THE ENGINEER.
4. BOTTOM TENSION WIRE SHALL BE PLACED WITHIN THE LIMITS OF THE FIRST FULL FABRIC WEAVE.
5. DETAILS ARE ILLUSTRATIVE AND SHALL NOT LIMIT HARDWARE DESIGN OR POST SELECTION OF ANY PARTICULAR FENCE TYPE.
6. COATING FOR POSTS, TOP RAIL, FITTINGS AND FABRIC SHALL BE VINYL OR POWDER COATED FROM THE FACTORY. SEE 1998 KCSWDM 5.3.1 FOR COLOR.
7. SEE STANDARD PLAN 5-23 FOR GATE DETAIL.

ROLL FORMED SECTIONS

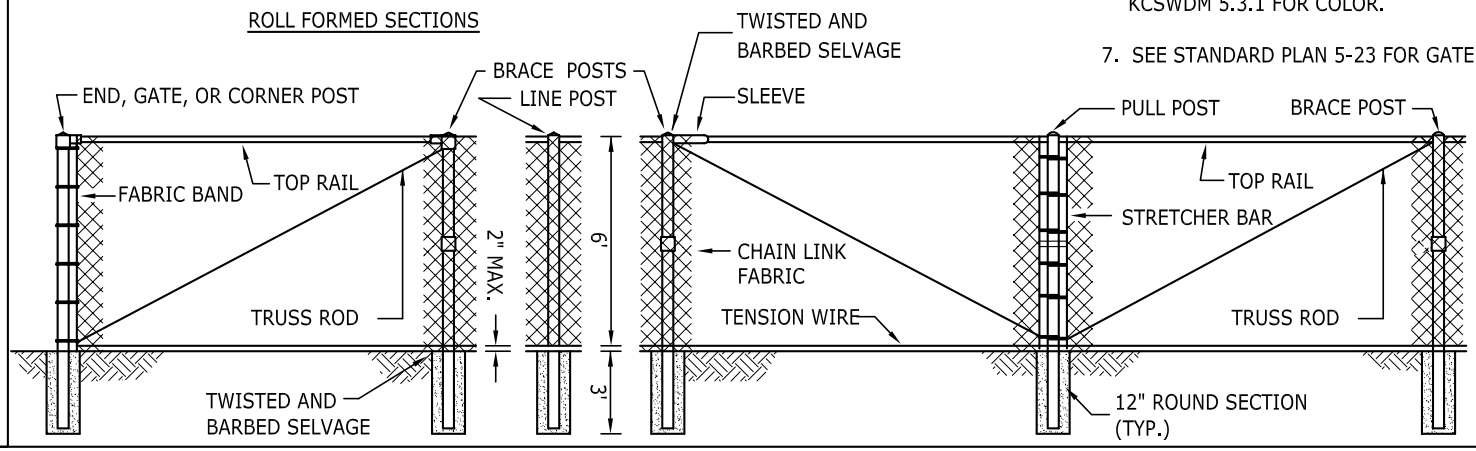

NOTE: THIS PLAN IS NOT A LEGAL ENGINEERING DOCUMENT BUT AN ELECTRONIC DUPLICATE. THE ORIGINAL, SIGNED BY THE ENGINEER AND APPROVED FOR PUBLICATION IS KEPT ON FILE AT THE CITY OF KENT. A COPY MAY BE OBTAINED UPON REQUEST.

KENT WASHINGTON

CITY OF KENT
ENGINEERING DEPARTMENT

CHAIN LINK FENCE, TYPE 1
FOR PONDS ONLY

DESIGNED DWH
DRAWN BB
CHECKED
APPROVED

SCALE NONE
DATE
ENGINEER

STANDARD PLAN
5-22